ZIMMERLI
MESSTECHNIK AG
Since 1974

Schlossgasse 10 CH-4125 Riehen Tel.: +41 61 645 98 00 E-Mail: info@zimmerliag.com www.zimmerliag.com

Operating manual
For medium pressure reducing valve
Type PR/F… and PR/D…

PR/F

PR/D

Contents

1 General information 2
2 Warranty provisions 2
3 Purpose 2
3.1 Intended use 2
3.2 Assembly work on the pressure regulator 2
4 Safety provisions 3
5 Material resistance 3
6 Startup 3
6.1 Before installation 3
6.2 Installation 3
6.3 Assembly position and installation 3
6.4 Configuring the setpoint 4
7 Maintenance and repairs 4
7.1 Inspection intervals 4
8 Code: PR 15 5
9 Code: PR 25 6

1 General information

This operating manual is for handling pressure regulators. Operating errors can be prevented only with knowledge of this operating manual.

Operating personnel must be informed about the contents of this operating manual.

Improper use may result in hazard to life for the user or other third parties and/or damage to other material assets.

We reserve the right to make technical modifications for improvement purposes to the comparisons and information in this operating manual.

2 Warranty provisions

There shall be no liability, or the warranty shall be void under the following conditions:
- The information and instructions of the operating manual are not followed.
- The devices are improperly used.
- The devices are used for purposes other than their intended one.
- Any type of functional changes were conducted without the written permission of ZIMMERLI MESSTECHNIK AG.
- Disregard of the applicable safety regulations when operating the device.
- Guards were not used or functionality was disabled.

Only approved, original spare parts must be used when replacing parts and/or for procuring spare parts.

3 Purpose

These type of pressure regulators are suitable for various tasks (e.g. inerting containers with inactive gases).

The exact design is customized and must therefore be taken from the device's technical information.

3.1 Intended use

Ambient temperature:	-20 °C up to +40 °C
Ambient pressure:	0.8 to 1.1 bar
Medium pressure:	Permissible PN, maximum p_1, maximum p_2 according to the data sheet
Medium temperature:	According to sealing material, see data sheet
Degree of protection:	IP40, with IP54 weather protection

Limitations of the medium: No combustible gases in an explosive concentration. Exception, ATEX-certified devices according to:
II 2 G Ex h IIB T6 Gb
II 3 G Ex h IIC T6 Gc
II 2 D Ex h IIIC T6 Db
II 3 D Ex h IIIC T6 Dc

External radiation (electromagnetic, ionizing radiation, ultrasound): none (if such radiation is present in the area used, the hazard must be taken into account and assessed by the user.) Keep the devices free of dust (dust thickness smaller than 1 mm).

3.2 Assembly work on the pressure regulator

The user and operator must take measures for mounting, disassembly, and maintenance work of and on the pressure regulator in areas with explosive atmospheres to prevent these operations from creating sources of ignition.

4 Safety provisions

Any work on or with the device may be performed only by qualified personnel who are familiar with the applicable regulations on operating pressure regulators and/or pressure containers.

If disassembling safety equipment is required for installation, it must be assembled and inspected immediately once the work has concluded.

Do not exceed the operating pressure. It is specified on the nameplate of each device.

When using the device, the provisions regarding the filling material must be followed.

Natural regulations regarding usage and test intervals must be followed.

5 Material resistance

Since the operator chose the material, the supplier cannot provide any guarantees regarding material resistance. It is the operator's responsibility to ensure that the material of the devices, including seals and add-on components (e.g., pressure gauges, pilot regulator, etc.) are adequately resistant against the medium.

6 Startup

6.1 Before installation

Before installation, perform a visual inspection on the device to determine any transport damage. The device's performance data must be reviewed (max. inlet pressure, secondary pressure, etc.).

The values noted on the nameplate are the values measured in our functional test.

The resistance of the materials has to be checked (see the corresponding chapter of this operating manual).

Newly installed pipelines must be fully rinsed clean to eliminate mechanical residues. It must be ensured that the pressure regulator is connected at the local equipotential bonding, either through an adequate and permanent connection to metallic pipes or via a direct connection to local equipotential bonding.

6.2 Installation

Always install the medium pressure regulator as close as possible to the process tank or consumer within non-turbulent flow.

Be mindful of the flow direction! (Marked on the housing with an arrow). Otherwise, there is the risk of damaging the pressure regulator.

6.3 Assembly position and installation

The Installation position is freely selectable. Sealed devices are set to the desired pressure according to the ordered position If the devices are configured by the user, then this also must take place in the subsequent installation position.

The configuration can be sealed using the lateral hole in the setting screw. Factory-sealed devices are set to the specified pressure.

Assembly must be performed on both sides (p_1, primary side and p_2, secondary side) within non-turbulent flow. To that end:
- Straight inlet piping of 5 x DN on the primary side and
- Straight outlet piping of 10 x DN on the secondary side is recommended

Furthermore, it is recommended that you install one shut-off valve each before and after the pressure regulator to simplify any maintenance work. Furthermore, a suitable filter must be installed before the pressure regulator in case of dirty gases or if there is a hazard of solid particles.

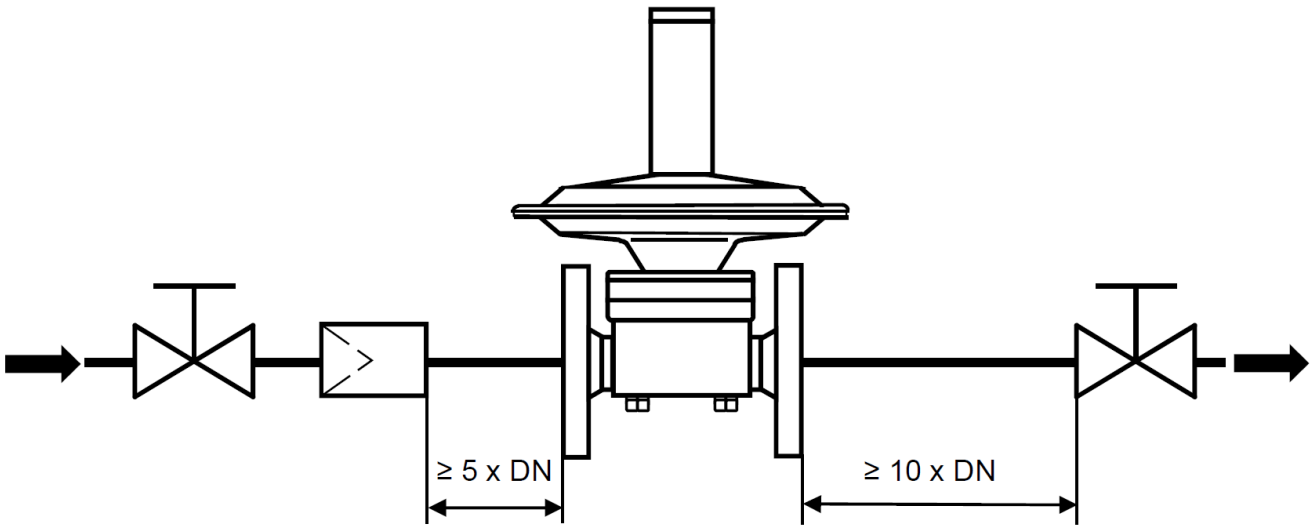

Avoid pressure shocks after assembly and always open shut-off valves slowly!

6.4 Configuring the setpoint

Always open the valves in lines before or after the pressure regulator slowly and avoid pressure shocks!

Spring-loaded model PR/F:
Slowly open the valve or ball valve before or after the pressure regulator. Set the desired pressure by turning the setting screw (8 mm hexagon socket).
Warning! Observe the maximum values on the nameplate.
Clockwise rotation = Decreasing secondary pressure p_2
Counterclockwise rotation = Increasing secondary pressure p_2

Dome-loaded model with pilot regulator PR/Ds / De:
The dome pressure is set to the desired value using a pilot regulator via a handwheel or a setting screw (depending on the design). Maximum permissible dome pressure according to nameplate/pressure level of the process connections

Dome-loaded model without pilot regulator PR/D:
Apply pressure to the dome via the G1/8”. Open the needle valve in the lateral surface 1 ... 2 rotations (right-hand thread). Upon reaching the desired dome pressure, carefully close the needle valve; the sealing surfaces are metallically sealing. The gas connection to the dome can subsequently be removed again.

7 Maintenance and repairs

The previously mentioned pressure regulators work without auxiliary energy and are maintenance-free. Additional queries may be processed only by specifying the serial number.

The serial number must be specified for spare part orders.

Device returns for repair or modification can be accepted only if they have been cleaned and have a completed RMA according to the applicable regulations. In the case of hazardous media, we recommend returning the device disassembled and cleaned.

7.1 Inspection intervals

An annual review of the function or maintenance is recommended depending on the characteristics of the medium and the respective operating states. Depending on these results, the testing/maintenance interval can be shortened or extended by the operator/user.

8 Code: PR 15

PR/D **PR**/Ds **PR**/De **PR**/F	D: G¼ (¼" BSP) Ds: G¼ (¼" BSP) De: G¼ (¼" BSP)	**Funktion** Function Fonction	Domgesteuert Dom-Fremdsteuer. Dom-Eigensteuer. Federgesteuert	Dome loaded Dome / Remote Dome / Pilot Spring loaded	Dôme Pilotage/indirecte Pilotage/directe Dôme à ressort	0.5 - 40 bar 0.5 - 40 bar 0.5 - 40 bar 1.0 – 10 bar	
15 **15** **15** **15** **15** **15**	DN15, PN40 ½", 150 lbs ½", 300 lbs G½ (½" BSP) ½" NPT-F TriClamp Ø 50.5	**Grösse** Size Dimension	Einbaulänge Einbaulänge Einbaulänge Einbaulänge Einbaulänge Einbaulänge	Lay length Lay length Lay length Lay length Lay length Lay length	Encombrement Encombrement Encombrement Encombrement Encombrement Encombrement	160 mm 179 mm 187 mm 152 mm 152 mm 141 mm	
S **H** **X**		**Material** Material Matériaux	Edelstahl Hastelloy C Sonder auf Anfrage	SST Hastelloy C Special on request	INOX Hastelloy C Spécial nous consulter	1.4404 2.4819, C276	
-FD **-FA1** **-FA2** **-GD1** **-GN1** **-TCB** **-XX**	DN15, PN40 ½", 150 lbs ½", 300 lbs G½,(½" BSP) ½" NPT-F TriClamp	**Anschluss** Connection Raccord	Flansch Flansch Flansch Gewinde Gewinde TriClamp Sonder auf Anfrage	Flange Flange Flange Thread Thread Ø 50.5 mm Special on request	Brides Brides Brides Fileté Fileté DIN 32676, B Spécial nous consulter	DIN EN 1092-1, B1 ANSI ANSI DIN / EN ANSI DIN / EN	
-H **-P** **-V**		**Membrane** Diaphragm Membrane	Hastelloy PTFE Viton®	-20/180 °C -20/180 °C -20/130 °C			
30 **100** **-**		**Federbereich**[1)] Spring range Plage de réglage	0.5 / 1 – 3.0 bar 0.5 / 1 – 10.0 bar 0.3 – 40.0 bar	**[p_2 = f (p_1)]**[1)] [p_2=+150 mbar/bar@p_1<16 bar & p_2=-150 mbar/bar@p_1>16 bar] [p_2=+150 mbar/bar@p_1<16 bar & p_2=-150 mbar/bar@p_1>16 bar] (D/De/Ds)	Dom	Dome	Dôme
11		**Sitz** Seat Siège	Kv = 1.5 / 11 mm				
		Optionen, /Options, /Options					
		/S1 [2)]	Manometerstutzen Pressure gauge nozzle Raccord de manomètre		G¼ (¼" BSP, p_1) G¼ (¼" BSP, p_1) G¼ (¼" BSP, p_1)		
		/S2 [2)]	Manometerstutzen Pressure gauge nozzle Raccord de manomètre		G¼ (¼" BSP, p_2) G¼ (¼" BSP, p_2) G¼ (¼" BSP, p_2)		
		/Sd [2)]	Manometerstutzen Pressure gauge nozzle Raccord de manomètre		G¼ (¼" BSP) auf Dom G¼ (¼" BSP) on dome G¼ (¼" BSP) sur dôme		
		/Sp	Eingestellt/plombiert	Adjusted and sealed	Ajusté et plombé		
		/C2.2	Werksabnahmezeugnis Works acceptance certificate Certificat de réception en usine		EN 10204-2.2 EN 10204-2.2 EN 10204-2.2		
		/C3.1	Werkstoffprüfzeugnis Material certificate Certificat materiel		EN 10204-3.1 EN 10204-3.1 EN 10204-3.1		
		/Cp	Einstellprotokoll	Test protocol	Protocole de réglage		
		/Ex	ATEX Zulassung	ATEX approval	Certificat ATEX		II 2 G Ex h IIB T6 Gb II 3 G Ex h IIC T6 Gc II 2 D Ex h IIIC T6 Db II 3 D Ex h IIIC T6 Dc
		/FDA	FDA-Bescheinigung	FDA approval	Certificat FDA		
		/Ff	Öl-Fettfrei	Certificate degreasing	Sans Huile ni Graisse		

Beispiel, Example, Exemple

PR/F	**15**	**S**	**-FD**	**-P**	**100**	**11**	**/S1/Sp/C3.1/Ex**

Hinweise / Hints / Remarque

[1)] Vordruckabhängigkeit
Primary pressure effect
Dépendance de la pression primaire

[2)] Manometer passend zum Druckbereich optional verfügbar
Pressure gauge, suitable for the pressure range, optionally available
En option, possibilité d'un manomètre avec la plage de pression correspondante.

9 Code: PR 25

PR/D **PR**/Ds **PR**/De **PR**/F	D: G¼ (¼" BSP) Ds: G¼ (¼" BSP) De: G¼ (¼" BSP)									**Funktion** Function Fonction	Domgesteuert Dom-Fremdsteuer. Dom-Eigensteuer. Federgesteuert	Dome loaded Dome / Remote Dome / Pilot Spring loaded	Dôme Pilotage/indirecte Pilotage/directe Dôme à ressort	0.5 - 40 bar 0.5 - 40 bar 0.5 - 40 bar 1.0 – 10 bar	
	25	DN25, PN40								**Grösse** Size Dimension	Einbaulänge Einbaulänge Einbaulänge Einbaulänge Einbaulänge Einbaulänge	Lay length Lay length Lay length Lay length Lay length Lay length	Encombrement Encombrement Encombrement Encombrement Encombrement Encombrement	200 mm 231 mm 244 mm 206 mm 206 mm 177 mm	
	25 **25** **25** **25** **25**	1", 150 lbs 1", 300 lbs G1 (1" BSP) 1" NPT-F TriClamp Ø 50.5													
		S **H** **X**								**Material** Material Matériaux	Edelstahl Hastelloy C Sonder auf Anfrage	SST Hastelloy C Special on request	INOX Hastelloy C Spécial nous consulter	1.4404 2.4819, C276	
			-FD	DN25, PN40						**Anschluss** Connection Raccord	Flansch Flansch Flansch Gewinde Gewinde TriClamp Sonder auf Anfrage	Flange Flange Flange Thread Thread Ø 50.5 mm Special on request	Brides Brides Brides Fileté Fileté DIN 32676, B Spécial nous consulter	DIN EN 1092-1, B1 ANSI ANSI DIN / EN ANSI DIN / EN	
			-FA1 **-FA3** **-GD3** **-GN3** **-TCB** **-XX**	1", 150 lbs 1", 300 lbs G1, (1" BSP) 1" NPT-F TriClamp											
				-H **-P** **-V**						**Membrane** Diaphragm Membrane	Hastelloy PTFE Viton®	-20/180 °C -20/180 °C -20/130 °C			
					30 **100** **-**					**Federbereich**[1] Spring range Plage de réglage	0.5 / 1 – 3.0 bar 0.5 / 1 – 10.0 bar 0.3 – 40.0 bar	**[p_2 = f (p_1)]**[1] [p_2=+150 mbar/bar@p_1<16 bar & p_2=-150 mbar/bar@p_1>16 bar] [p_2=+150 mbar/bar@p_1<16 bar & p_2=-150 mbar/bar@p_1>16 bar] (D/De/Ds)	Dom Dome Dôme			
						17				**Sitz** Seat Siège	Kv = 4.8 / 17 mm				
										Optionen, /Options, /Options					
										/S1 [2] **/S2** [2] **/Sd** [2] **/Sp**	Manometerstutzen Pressure gauge nozzle Raccord de manomètre Manometerstutzen Pressure gauge nozzle Raccord de manomètre Manometerstutzen Pressure gauge nozzle Raccord de manomètre Eingestellt/plombiert	 Adjusted and sealed	G¼ (¼" BSP, p_1) G¼ (¼" BSP, p_1) G¼ (¼" BSP, p_1) G¼ (¼" BSP, p_2) G¼ (¼" BSP, p_2) G¼ (¼" BSP, p_2) G¼ (¼" BSP) auf Dom G¼ (¼" BSP) on dome G¼ (¼" BSP) sur dôme Ajusté et plombé			
										/C2.2 **/C3.1** **/Cp** **/Ex** **/FDA** **/Ff**	Werksabnahmezeugnis Works acceptance certificate Certificat de réception en usine Werkstoffprüfzeugnis Material certificate Certificat materiel Einstellprotokoll ATEX Zulassung FDA-Bescheinigung Öl-Fettfrei	 Test protocol ATEX approval FDA approval Certificate degreasing	EN 10204-2.2 EN 10204-2.2 EN 10204-2.2 EN 10204-3.1 EN 10204-3.1 EN 10204-3.1 Protocole de réglage Certificat ATEX Certificat FDA Sans Huile ni Graisse	 II 2 G Ex h IIB T6 Gb II 3 G Ex h IIC T6 Gc II 2 D Ex h IIIC T6 Db II 3 D Ex h IIIC T6 Dc		
Beispiel, Example, Exemple															
PR/F	**25**	**S**	**-FD**	**-P**	**100**	**17**	**/S1/Sp/C3.1/Ex**								

Hinweise / Hints / Remarque

[1] Vordruckabhängigkeit
Primary pressure effect
Dépendance de la pression primaire

[2] Manometer passend zum Druckbereich optional verfügbar
Pressure gauge, suitable for the pressure range, optionally available
En option, possibilité d'un manomètre avec la plage de pression correspondante

ZIMMERLI Messtechnik AG, Schlossgasse 10, CH-4125 Riehen
E-Mail: info@zimmerliag.com
Fon: +41 61 645 98 00 www.zimmerliag.com